Oxford Cambridge and RSA

Friday 6 June 2025 – Afternoon

A Level Further Mathematics B (MEI)

Y431/01 Mechanics Minor

Time allowed: 1 hour 15 minutes

You must have:
- the Printed Answer Booklet
- the Formulae Booklet for Further Mathematics B (MEI)
- a scientific or graphical calculator

QP

INSTRUCTIONS
- Use black ink. You can use an HB pencil, but only for graphs and diagrams.
- Write your answer to each question in the space provided in the **Printed Answer Booklet**. If you need extra space, use the lined page at the end of the Printed Answer Booklet. The question numbers must be clearly shown.
- Fill in the boxes on the front of the Printed Answer Booklet.
- Answer **all** the questions.
- Where appropriate, your answer should be supported with working. Marks might be given for using a correct method, even if your answer is wrong.
- Give your final answers to a degree of accuracy that is appropriate to the context.
- The acceleration due to gravity is denoted by $g\,\mathrm{m\,s^{-2}}$. When a numerical value is needed use $g = 9.8$ unless a different value is specified in the question.
- Do **not** send this Question Paper for marking. Keep it in the centre or recycle it.

INFORMATION
- The total mark for this paper is **60**.
- The marks for each question are shown in brackets **[ ]**.
- This document has **8** pages.

ADVICE
- Read each question carefully before you start your answer.

© OCR 2025 [K/508/5595]
DC (CE/SG) 358261/3
OCR is an exempt Charity

1 Particles A and B move towards each other on a smooth horizontal surface. Particle A has speed $3\,\mathrm{m\,s^{-1}}$ and particle B has speed $8\,\mathrm{m\,s^{-1}}$.

After they collide directly, A and B move away from each other, A with a speed of $5.2\,\mathrm{m\,s^{-1}}$ and B with a speed of $v\,\mathrm{m\,s^{-1}}$. The collision between A and B is perfectly elastic.

(a) Find the value of v. **[1]**

(b) State the kinetic energy lost in the collision between A and B. **[1]**

Two different particles, C and D, move on a smooth horizontal surface. Particle C has a speed of $6.4\,\mathrm{m\,s^{-1}}$ towards D and particle D has a speed of $1.9\,\mathrm{m\,s^{-1}}$ away from C.

After they collide directly, the particles move away from each other. The speed of C after the collision is $0.2\,\mathrm{m\,s^{-1}}$. The coefficient of restitution between C and D is 0.8.

You are given that the mass of C is 3.5 kg.

(c) Determine the mass of D. **[4]**

2 **(a)** **(i)** State the dimensions of force. **[1]**

(ii) State the dimensions of energy. **[1]**

The surface tension, S, of a liquid can be defined as force per unit length. It can **also** be defined as energy per unit area.

(b) Show that these two definitions of surface tension are dimensionally consistent with one another. **[2]**

When a droplet of liquid is placed on a non-absorbent horizontal surface, the maximum height h m of the droplet is modelled by the formula

$$h = \lambda S^{\alpha} g^{\beta} \rho^{\gamma} ,$$

where

- λ is a dimensionless constant,
- S is the surface tension of the liquid in $\mathrm{N\,m^{-1}}$,
- g is the acceleration due to gravity in $\mathrm{m\,s^{-2}}$,
- ρ is the density of the liquid in $\mathrm{kg\,m^{-3}}$.

(c) Use dimensional analysis to determine the values of α , β and γ . **[4]**

At room temperature, water has a density of $1\,\mathrm{g\,cm^{-3}}$ and a surface tension of $0.073\,\mathrm{N\,m^{-1}}$. When a small droplet of water is placed on a non-absorbent horizontal surface, it has maximum height 0.53 cm.

(d) Find the value of λ . **[2]**

3 The diagram shows a crate of mass 30 kg on a smooth inclined plane. One end of a light inextensible rope is attached to the crate. The rope passes over a smooth pulley which is fixed at the top of the plane. The other end of the rope is held by a worker.

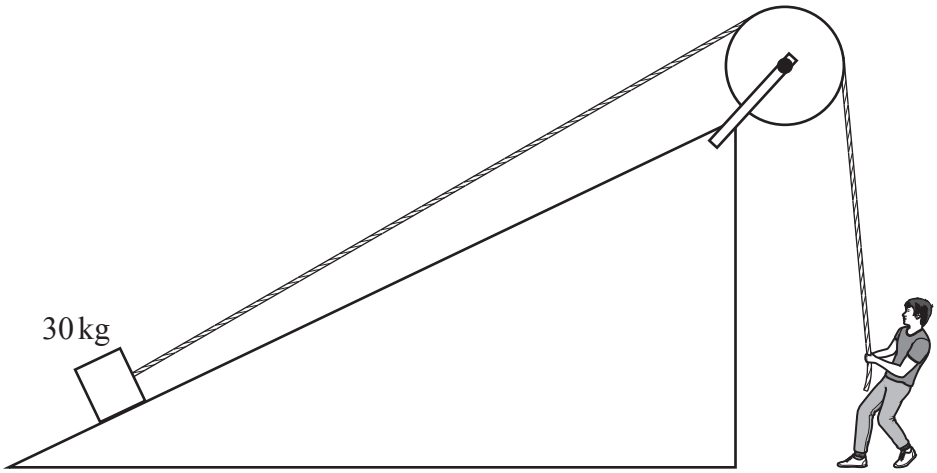

At first, the crate is at rest at a point A on the plane. The worker pulls continuously on the rope so that the crate moves up the plane.

Subsequently, the crate comes to rest, in equilibrium with the rope taut, at a point B on the plane. The vertical distance between A and B is 3.5 m.

(a) Calculate the work done by the tension in the rope as the crate moves from A to B. **[1]**

At a point C, which is between A and B on the plane, the rope makes an angle of 12° with AB. The crate passes through C with a speed of $0.8\,\mathrm{m\,s^{-1}}$. The tension in the rope when the crate is at C is 206 N.

(b) Calculate the power of the tension in the rope when the crate is at C. **[2]**

The worker now lets the crate slide back down to A, starting from rest at B. While moving from B to A, 894 J of work is done against the tension in the rope.

(c) Calculate the speed of the crate when it reaches A. **[2]**

(d) State **one** limitation of the model that could affect the answer to part **(c)**. **[1]**

4 A block of mass m kg rests on a rough plane inclined at an angle α to the horizontal. The coefficient of friction between the block and the plane is μ. At first the block is in equilibrium, and then α is gradually increased.

(a) Assuming that the block does not topple first, show that at the point of sliding $\mu = \tan\alpha$. **[2]**

The block is modelled as a uniform rectangular prism whose cross section has width w cm and height 22 cm. **Fig. 4.1** shows the block placed on the inclined plane so that the cross section contains a line of greatest slope.

Fig. 4.1

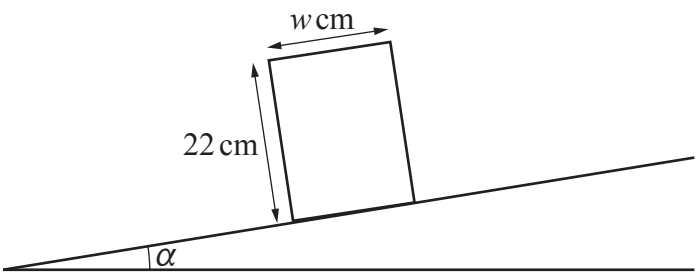

The coefficient of friction between the block and the plane is 0.6.

At first, the block is in equilibrium. As α is increased, equilibrium is broken by the block sliding, rather than toppling.

(b) Determine the range of possible values of w. **[3]**

For the remainder of the question you are given that $w = 15$, $m = 10$ and $\alpha = 30°$.

One end of a light inextensible string is attached to one of the top edges of the block. The other end of the string is attached to a point further up the inclined plane.

The string makes an angle of 45° with the inclined plane so that the block is held in equilibrium with its base horizontal, as shown in **Fig. 4.2**. Both the string and the centre of mass of the block lie in the same vertical plane as a line of greatest slope.

Fig. 4.2

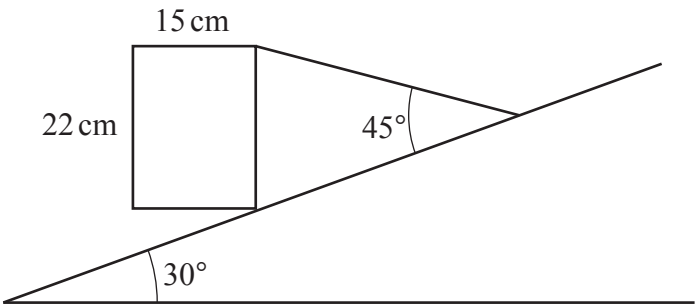

(c) Determine the tension in the string. **[3]**

(d) Determine the angle between the inclined plane and the total contact force that the inclined plane exerts on the block. **[6]**

5 The diagram shows a cuboid frame OABCDEFG where O is the origin of the coordinate system in which the points A, C and E have coordinates (50, 0, 0), (0, 30, 0) and (0, 0, 20) respectively.

The frame is made of 12 light inextensible rods.

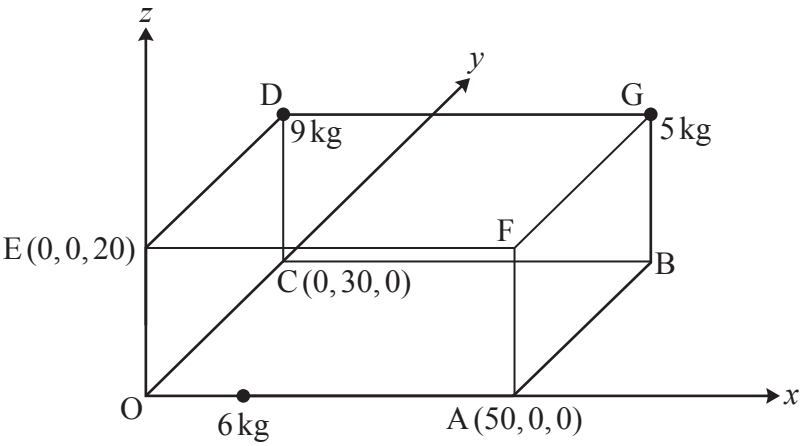

Three particles are attached to the frame as follows:

- A particle of mass 9 kg at D.
- A particle of mass 5 kg at G.
- A particle of mass 6 kg at the point (λ , 0, 0) on OA, where $0 \leqslant \lambda \leqslant 50$.

The centre of mass of the frame with the three particles attached lies at $(\overline{x}, \overline{y}, \overline{z})$.

(a) Show that $\overline{y} = 21$ and $\overline{z} = 14$. **[2]**

(b) Find the range of possible values of $\overline{x}$. **[3]**

For the remainder of the question, you are given that the particle of mass 6 kg is fixed at A.

The frame is now suspended by two light vertical wires, one attached at O and the other at C. The frame hangs in equilibrium with OC horizontal.

(c) Find the tension in each of the two wires. **[3]**

(d) Calculate the angle that the plane OABC makes with the downward vertical. **[2]**

The wire attached to C snaps, and the frame is left suspended in equilibrium only by the vertical wire attached at O.

(e) Calculate the angle that OA now makes with the downward vertical. **[2]**

6 In this question the unit vectors **i** and **j** are directed horizontally.

Two skaters, Amos and Beth, move on a horizontal ice rink. The masses of Amos and Beth are 70 kg and 50 kg respectively.

At first Amos and Beth move as a single body with velocity $4\mathbf{i}\ \mathrm{m\,s^{-1}}$. Amos then exerts an impulse on Beth of $(35\mathbf{i} + 70\mathbf{j})\ \mathrm{N\,s}$ so that they move apart with different speeds.

(a) Determine Beth's speed after separation. **[3]**

(b) Determine the total gain in kinetic energy of the two skaters. **[3]**

On another occasion Amos and Beth are moving as a single body with velocity $(3.5\mathbf{i} + 2.5\mathbf{j})\ \mathrm{m\,s^{-1}}$.

Amos exerts an impulse on Beth so that they move apart with equal speeds, and Amos travels in the **i** direction.

(c) Determine the possible speeds of the skaters after separation. **[6]**

END OF QUESTION PAPER

OCR
Oxford Cambridge and RSA

Copyright Information

OCR is committed to seeking permission to reproduce all third-party content that it uses in its assessment materials. OCR has attempted to identify and contact all copyright holders whose work is used in this paper. To avoid the issue of disclosure of answer-related information to candidates, all copyright acknowledgements are reproduced in the OCR Copyright Acknowledgements Booklet. This is produced for each series of examinations and is freely available to download from our public website (www.ocr.org.uk) after the live examination series.

If OCR has unwittingly failed to correctly acknowledge or clear any third-party content in this assessment material, OCR will be happy to correct its mistake at the earliest possible opportunity.

For queries or further information please contact The OCR Copyright Team, The Triangle Building, Shaftesbury Road, Cambridge CB2 8EA.

OCR is part of Cambridge University Press & Assessment, which is itself a department of the University of Cambridge.

© OCR 2025